metabo

WQ 1400

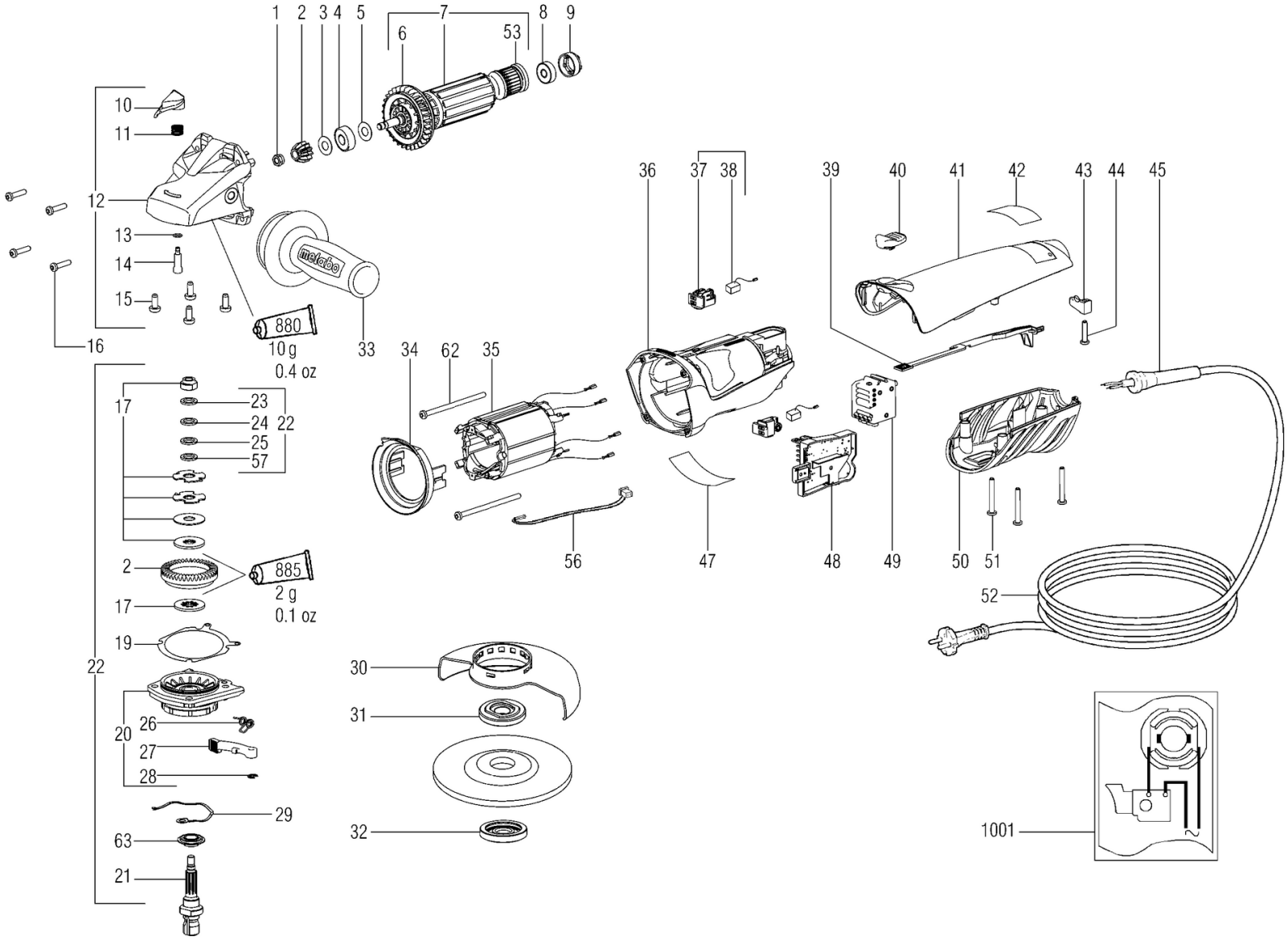

metabo

WQ 1400

Position	Amount	Type number	Description	PG
1	1	341102140	Hexagon nut w.recess	11
2	1	316041660	Bevel gear w.pinion	25
3	1	339006390	Washer,7,05x19,5x0,2	11
4	1	143115700	Ball bearing,8x22x7	14
5	1	339132280	Washer	11
6	1	316041450	Fan w. prot. Grid	17
7	1	310009170	Armature compl.,230V	39
8	1	143115690	Ball bearing,6x19x6	13
9	1	344097870	Rubber bushing	11
10	1	343393650	Push button red	11
11	1	342003390	Pressure spring	11
12	1	316041620	Gear housing compl.	29
13	1	143193650	O-ring	11
14	1	341515280	Bolt	11
15	4	141123660	Fillister head screw	11
16	4	141116020	Self-tap fill h screw	12
17	1	316041650	Friction washer cpl.	23
19	2	339011570	Gasket	11
20	1	316041720	Flange w.clamping lever cpl.	29
21	1	341161030	Spindle shaft	27
22	1	316041790	Safety clutch w.pinion,M14	36
23	1	141151120	Washer 10,2 X 14,8X 0,2	11
24	1	141152300	Washer 10,2 X 14,8X 0,1	12
25	1	141155550	Washer 10,2 X 14,8X 1,0	11
26	1	342022040	Spring clip	11
27	1	341070440	Lever	14
28	1	141181810	Circlip	11
29	1	342050840	Compression Spring	11
30	1	339203010	Wheel guard,D125	23
31	1	341031160	Clamping flange	22
32	1	316023660	Clamping nut compl.,M14	25
33	1	314000540	Handle cpl.	22
34	1	339151040	Baffle	12
35	1	311010750	Field coil assembly w.field coil,230V	37
36	1	315013230	Motor housing	20
37	2	316045170	Brush holder compl. cut out,230V	21
38	1	316042070	Carbon brush Set,230V	21
39	1	343393530	Switch rod	11
40	1	343392980	Switch slide	11
41	1	343393460	Housing cover	17
42	1	338124010	M-Schild 08 TR 49-52x22 WQ 1400	11

metabo

WQ 1400

Position	Amount	Type number	Description	PG
43	1	343362490	Cable clip	12
44	1	141116020	Self-tap fill h screw	12
45	1	344100970	Cable sleeve	12
47	1	338059460	Rating plate	11
48	1	343081020	Electronic unit,230V 50-60Hz	34
49	1	343409450	Switch	22
50	1	343395610	Housing black	15
51	3	141123490	Fillister head screw	11
52	1	344497170	Cable with plug	25
53	1	343399850	Tacho disc	13
56	1	399999990	Part not needed	
57	1	141153920	Washer 10,2 X 14,8X 0,5	11
62	2	141118270	Self-tap. fill. h. screw	12
63	1	343375540	Sealing washer	11
880	1	344130920	Grease 100G	31
885	1	344130560	Grease SF 011 50Gr 1,8oz	33
1001	1	338504700	Wiring diagram,230V	

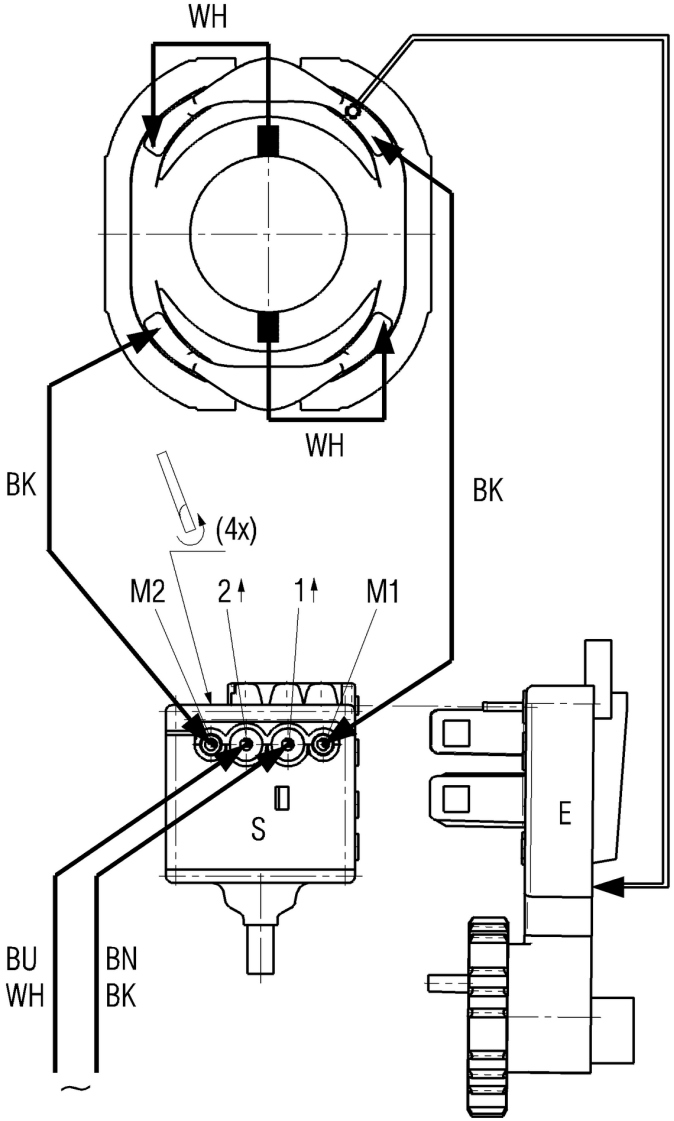
WH
WH
BK
BK
(4x)
M2
2
1
M1
S
E
BU
WH
BN
BK
~