metabo

ST 18 LT 130

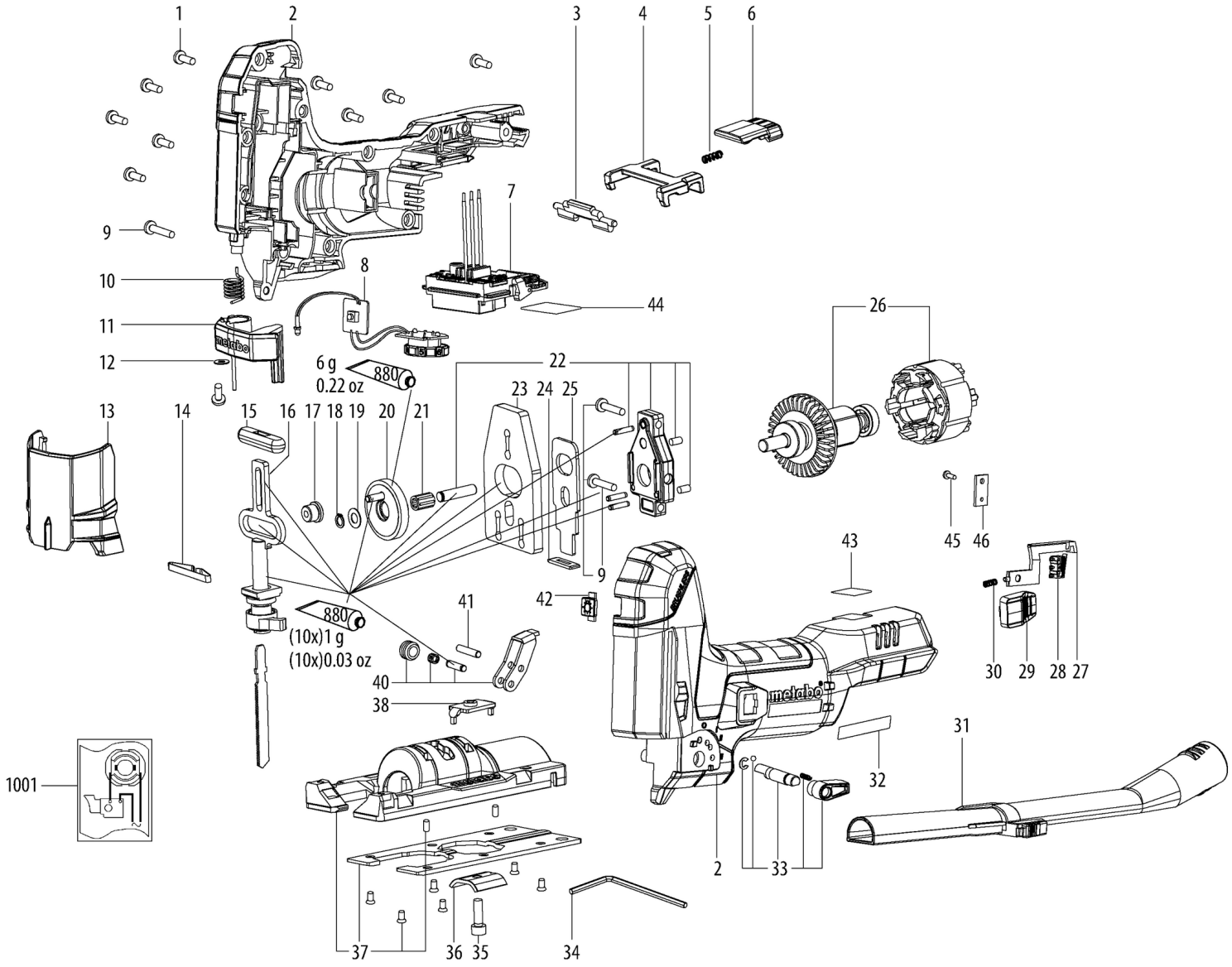

metabo

ST 18 LT 130

Position	Amount	Type number	Description	PG
1	10	341706120	Fillister head screw	11
2	1	343464150	Housing w.cover	24
3	1	343460640	Transmission element	11
4	1	343460650	Release bracket	11
5	1	342011170	spring	11
6	1	343463460	Press button	12
7	1	343092940	Electronic unit compl.	38
8	1	343092950	Electronic unit compl.	20
9	3	341706130	Fillister head screw	11
10	1	341214260	Spring clip	11
11	1	316081540	Lever compl.	13
12	1	341020510	Washer	11
13	1	344350920	Eye shield	13
14	1	341071820	spring piece	11
15	1	343442830	Guide	12
16	1	316080850	Ram compl.	21
17	1	341071840	Guide roller	11
18	1	6400071061	RETAINING RING FOR SHAFTS 6X0,7	11
19	1	141152070	Washer	11
20	1	316080860	Spur gear compl.	18
21	1	342200740	Needle sleeve	11
22	1	316093440	Balancing plate compl.	16
23	1	339148040	Balancing plate	18
24	1	343442840	Dust protection	11
25	1	341166460	Plate	18
26	1	317005670	Motor compl.,18V	30
27	1	343464170	Switch rod	12
28	1	343413610	Switch	13
29	1	343463440	Switch slide	11
30	1	342011190	spring	11
31	1	343463450	Nozzle	14
32	1	338139360	Type label 01054 ST 18 LT 130 BL	12
33	1	316093430	Switch lever cpl.	11
34	1	344161530	Hexagonal key	12
35	1	341706140	Fillister head screw	11
36	1	339126800	Champing claw	11
37	1	316080880	Base plate compl.	21
38	1	339126880	LOCKING	12
40	1	316093410	Supporting lever compl.	14
41	1	341525340	Pin	11
42	1	344103440	button cap	13

metabo

ST 18 LT 130

Position	Amount	Type number	Description	PG
43	1	338129960	Indication label, CAS	12
44	1	338083000	Rating plate 01054XXX ST 18 LT 130 BL	12
45	1	341706160	Fillister head screw	
46	1	343464960	Guide plate	
880	0,010	344131520	Grease (tube)	20
1001	1	338506940	Wiring diagram	