metabo

FSD 36-18 LTX BL 40

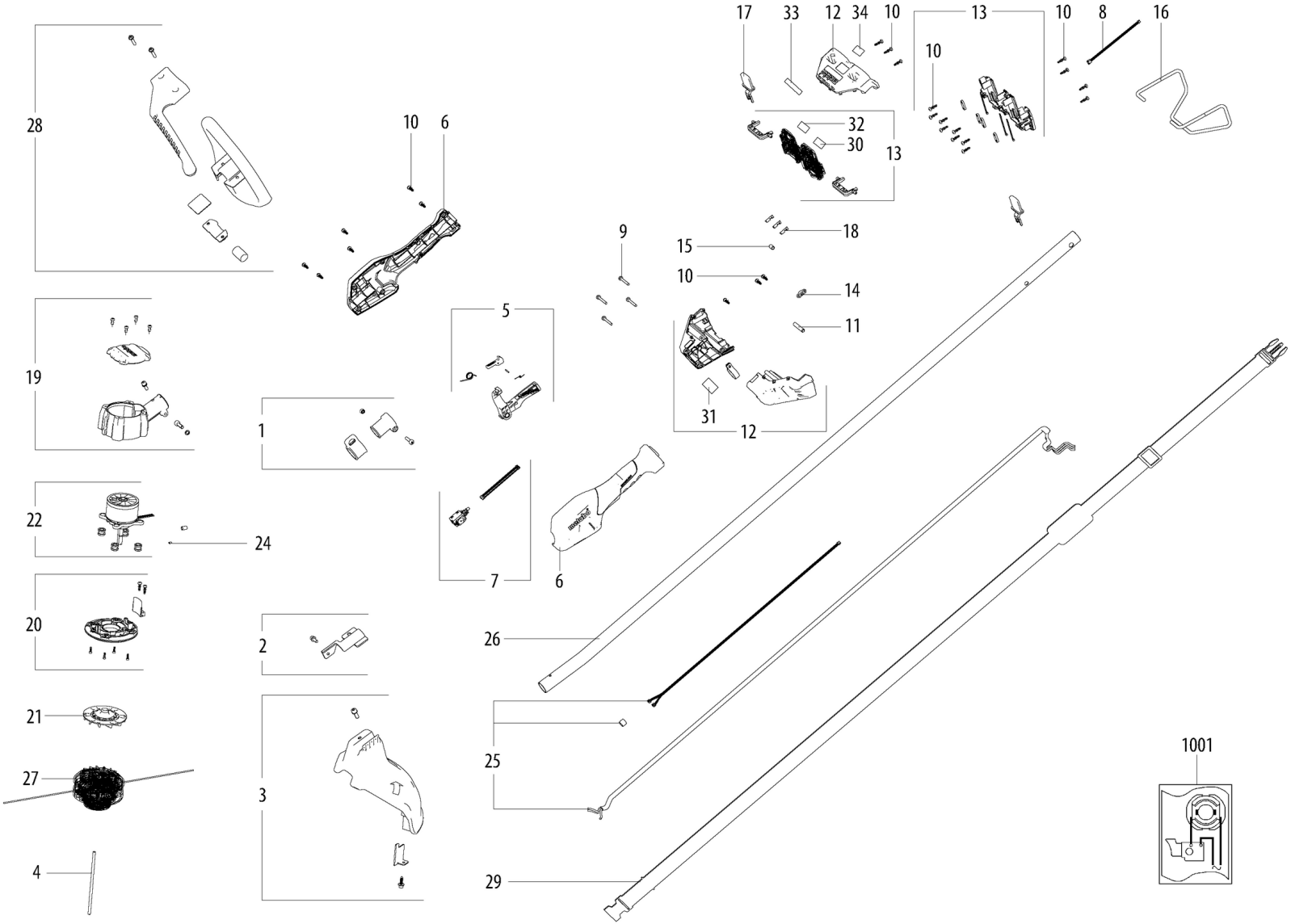

metabo

FSD 36-18 LTX BL 40

Position	Amount	Type number	Description	PG
1	1	316071890	Ring cpl.	16
2	1	316071900	Retaining sheet compl.	16
3	1	316071910	Guard support comp.	26
4	1	341539730	Locking pin	12
5	1	316071920	Latch Key cpl.	17
6	1	316071930	Handle comp.	23
7	1	316072590	Cable with Poti switch	31
8	1	344534770	Cable	23
9	4	341721630	Cap screw	11
10	24	341721890	Cap screw	11
11	1	341571070	Shoulder bolt	12
12	1	316071940	Housing compl.	24
13	1	316081280	Electronic compl.	57
14	1	341164420	STRESS RELIEVE	11
15	2	339041640	Shrink hose	11
16	1	342200770	Protective strap	22
17	2	343452210	Locking slide	12
18	3	344533310	plug	13
19	1	316071960	Housing compl.	33
20	1	316071970	Motor flange cpl.	19
21	1	316071980	Fan compl.	28
22	1	316072040	Motor compl.	49
24	6	339083010	Connector	22
25	1	344533320	Lead wire with terminal	29
26	1	316071990	Pipe compl.	29
27	1	628429000	Replacement spool with thread	
28	1	316072000	Front handle cpl.	25
29	1	628427000	Shoulder strap	
30	1	338075900	Rating plate	12
31	1	338129960	Indication label, CAS	12
32	1	338132520	Indication label same battery	12
33	1	338132040	Type label 01610 FSD 36-18 LTX BL 40	12
34	1	338132060	Indication label	12
1001	1	338506660	Diagram	

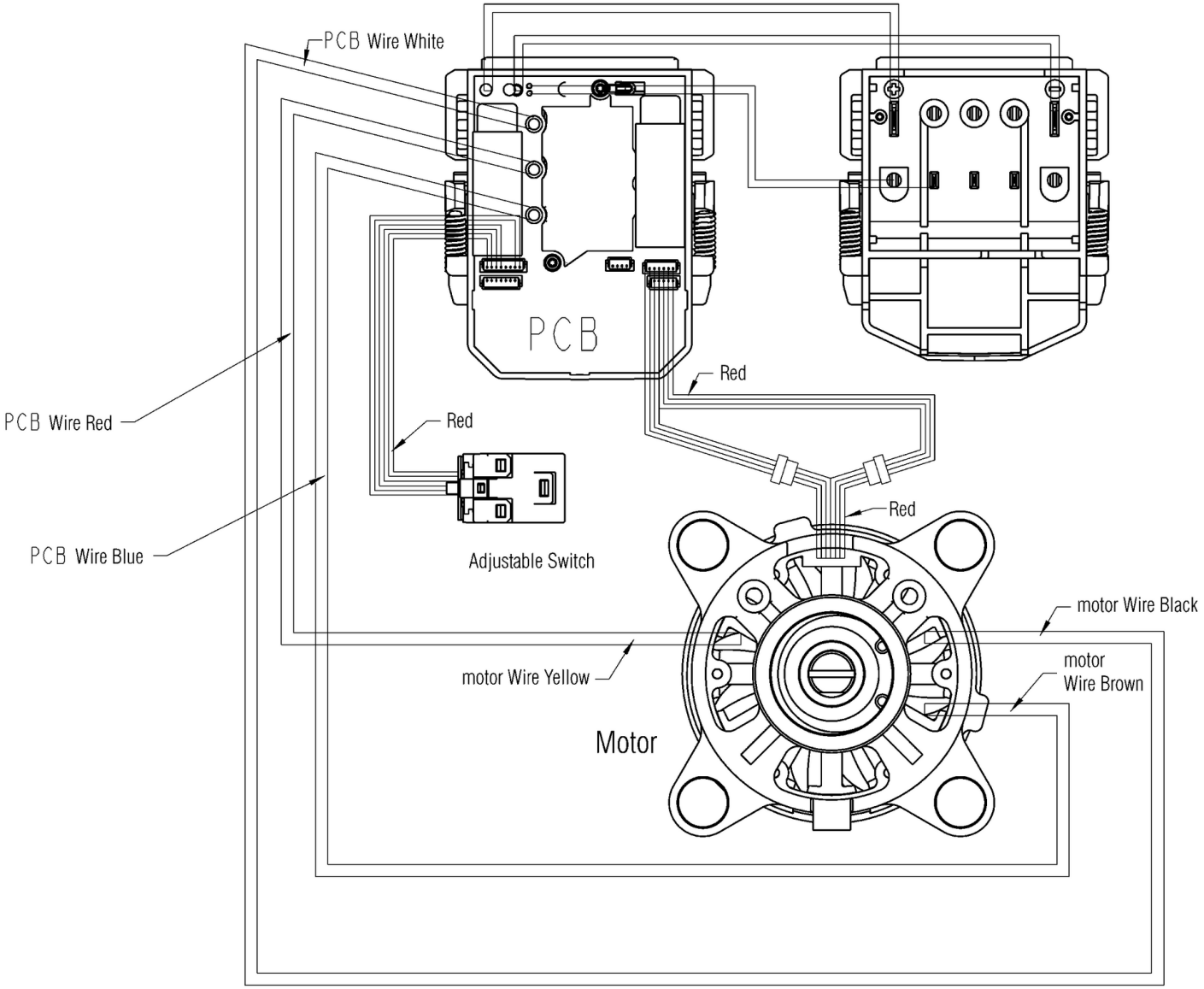
PCB Wire White
PCB
Red
PCB Wire Red
Red
Red
PCB Wire Blue
Adjustable Switch
motor Wire Black
motor Wire Yellow
motor
Wire Brown
Motor