metabo

WB 18 LTX BL 15-180 Quick

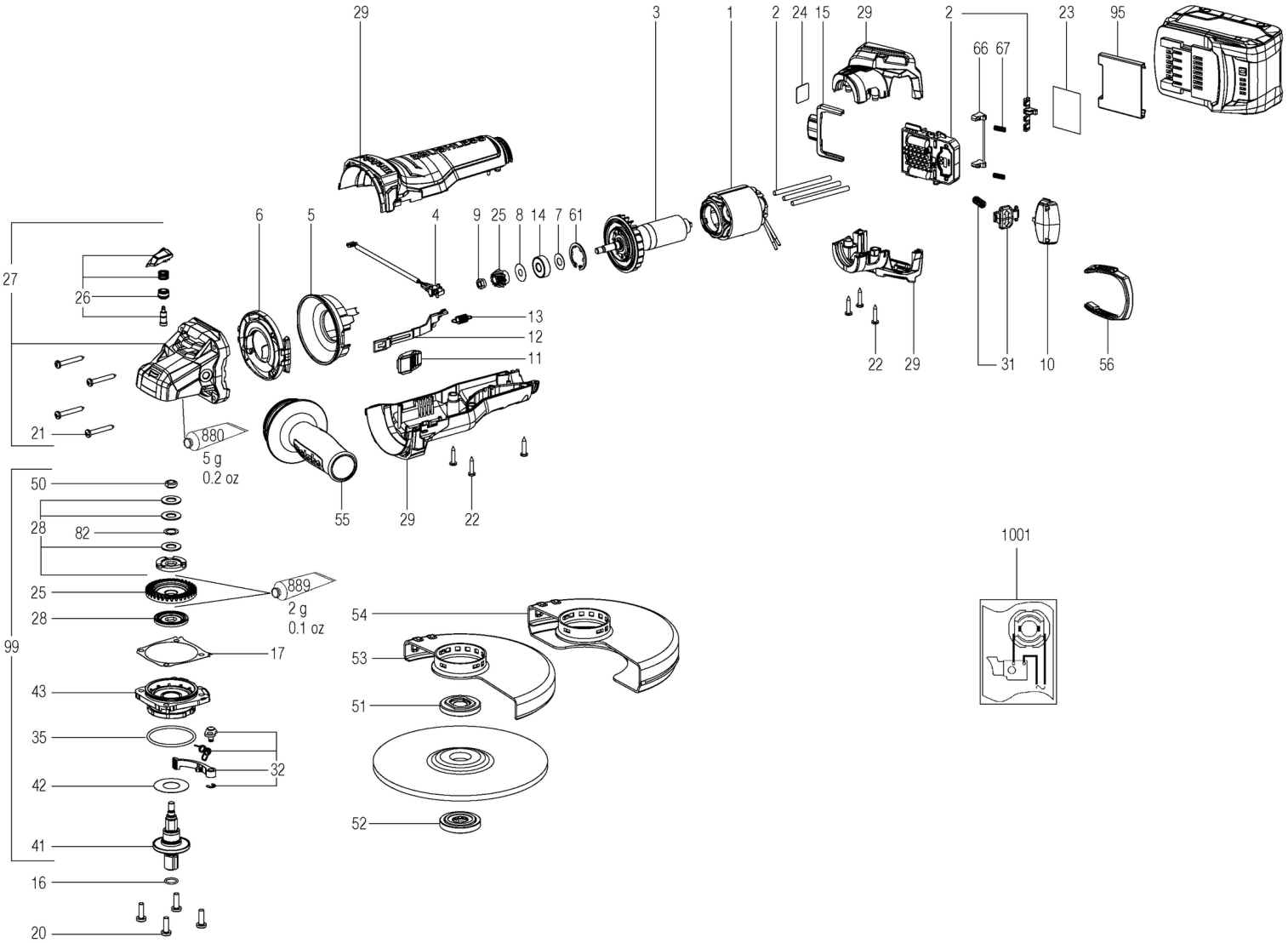

metabo

WB 18 LTX BL 15-180 Quick

Position	Amount	Type number	Description	PG
1	1	311013480	Stator compl. W18-15 BL	34
2	1	343089310	18V service electronic unit, WB-1500	46
3	1	310014130	Rotor compl. W18-15 BL	32
4	1	316069700	Strand set w.switch	23
5	1	339151370	Baffle	13
6	1	339151350	Baffle	13
7	1	339133060	Washer,8,05x17x0,4	11
8	1	339006390	Washer,7,05x19,5x0,2	11
9	1	341100940	Hexagon nut w.recess	12
10	1	316069710	Cover cap without dial	18
11	1	343454590	Switch slide	19
12	1	343458800	Switch rod	12
13	1	342004340	Tension spring	11
14	1	143116230	Ball bearing,8x22x7	12
15	1	343447510	Locking slide	11
16	1	143192490	O-ring	12
17	1	339011970	Gasket	11
20	4	141121640	Fill. head screw(DIN 7985)	11
21	4	141125000	Fillister head screw	11
22	6	141113180	Self-tap. fill. h. screw	11
23	1	338079880	Rating plate	12
24	1	338129960	Indication label, CAS	12
25	1	316054980	Bevel gear w.pinion	25
26	1	316072280	Spindle stop compl.	20
27	1	316072300	Gear housing compl.	32
28	1	316084680	Friction washer set compl.	22
29	1	316081760	Motor housing complete Sideswitch 18-15	34
31	1	316069840	Spindle lock compl.	17
32	1	316055110	Clamping lever compl.	20
35	1	143195640	O-ring	11
41	1	316071330	Spindle	28
42	1	339007800	Washer	11
43	1	343433280	Flange compl.	20
50	1	341102460	Nut	13
51	1	341031160	Clamping flange	22
52	1	316055350	Clamping nut compl.,M14	22
53	1	339204780	Wheel guard,D 180	29
54	1	339204840	Cutting wheel guard welded,D180	29
55	1	314000970	Anti-vibration handle,M 8	24
56	1	343453150	Filter compl.	19
61	1	141156650	Retaining ring	11

Position	Amount	Type number	Description	PG
66	1	316066720	Latch compl.	14
67	2	342004180	Pressure spring	11
82	1	141153920	Washer 10,2 X 14,8X 0,5	11
99	1	316084630	Safety clutch with pinion	34
880	1	344130920	Grease 100G	31
889	1	344130560	Grease SF 011 50Gr 1,8oz	33
1001	1	338506710	Verdrahtungsplan 18 V	

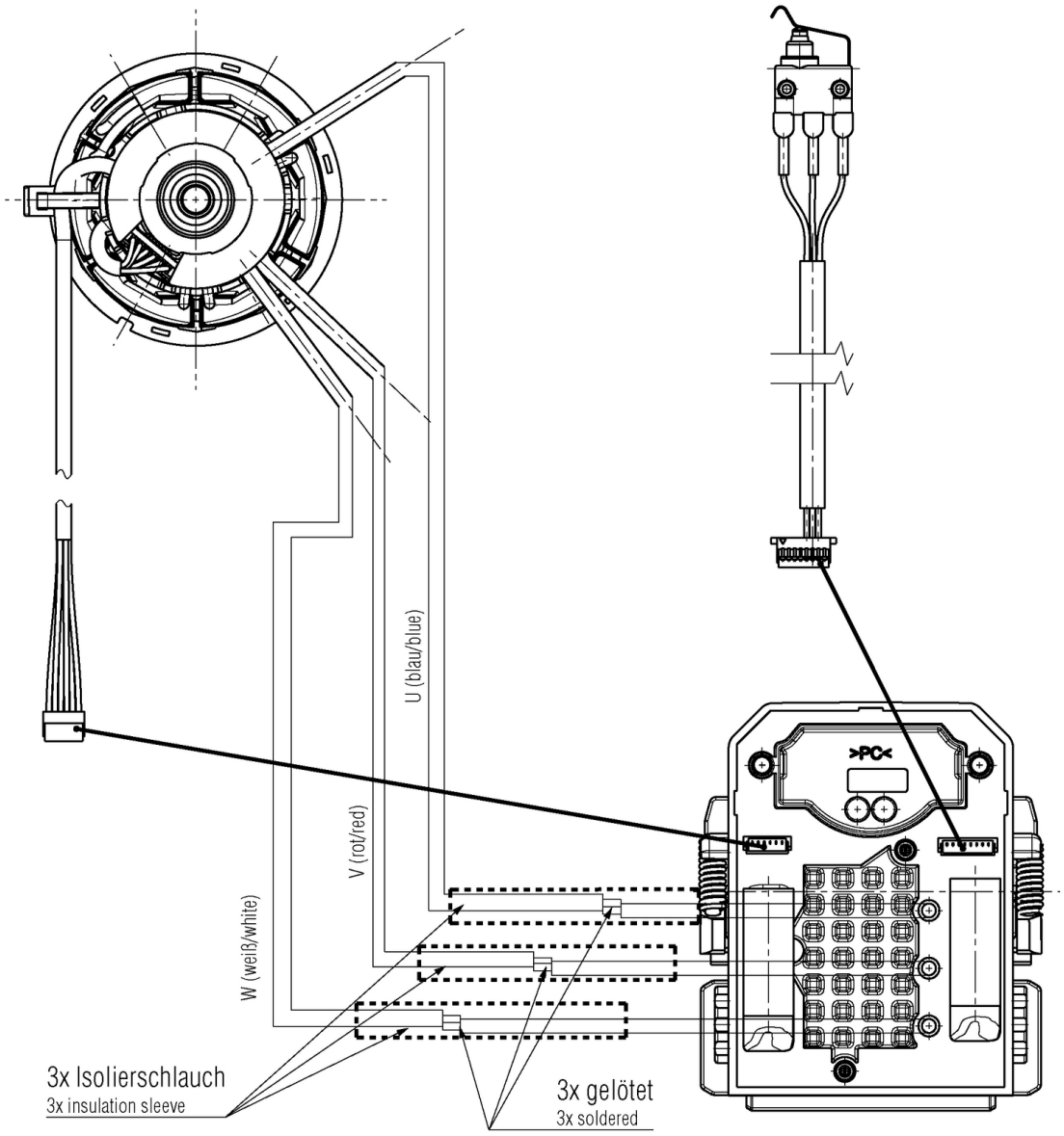
U (blau/blue)
V (rot/red)
W (weiß/white)
>PC<
3x Isolierschlauch
3x insulation sleeve
3x gelötet
3x soldered