metabo

WPBA 18 LTX BL 15-180 Q DS

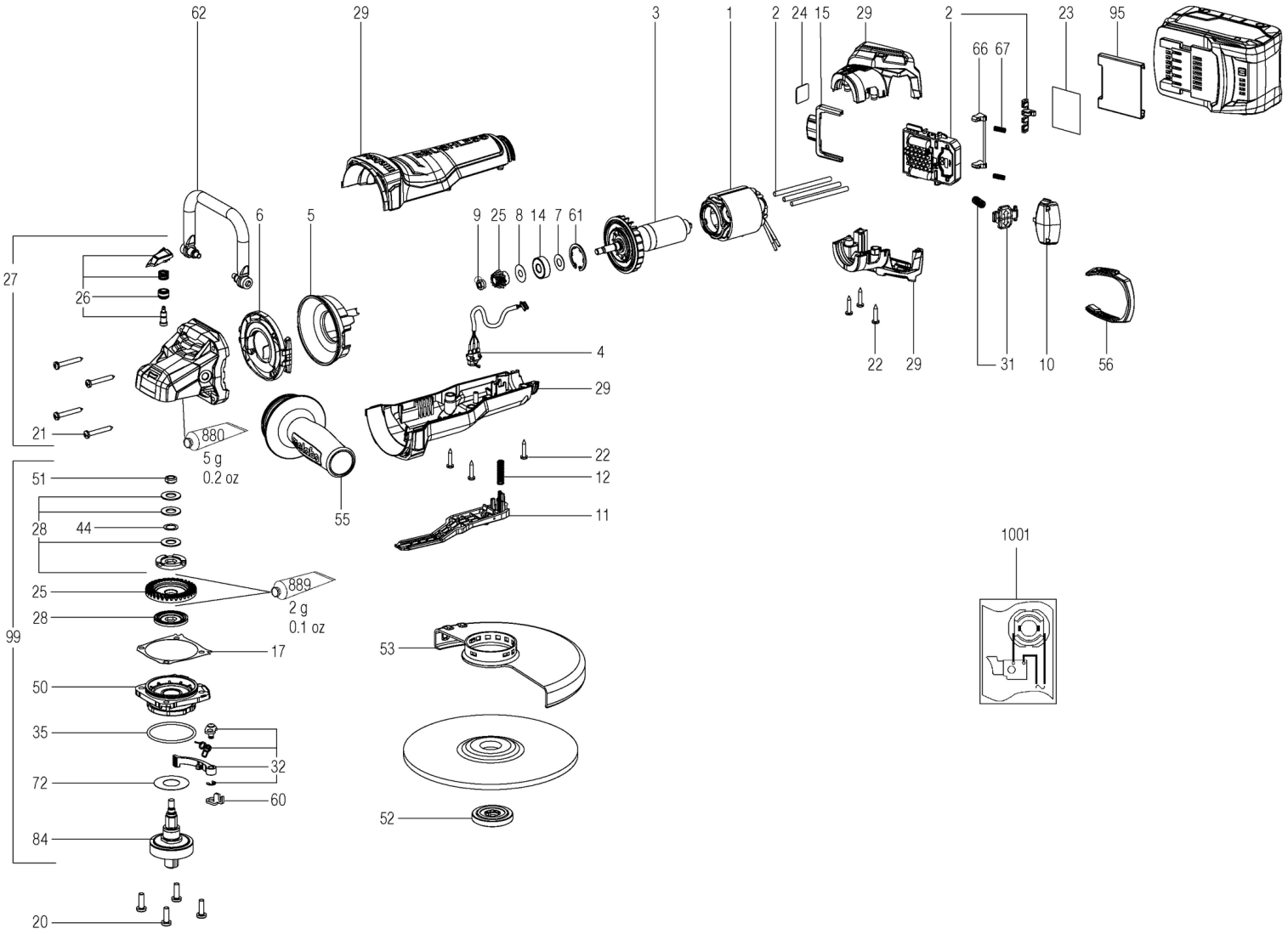

metabo

WPBA 18 LTX BL 15-180 Q DS

Position	Amount	Type number	Description	PG
1	1	311013480	Stator compl. W18-15 BL	34
2	1	343089310	18V service electronic unit, WB-1500	46
3	1	310014130	Rotor compl. W18-15 BL	32
4	1	316069700	Strand set w.switch	23
5	1	339151370	Baffle	13
6	1	339151350	Baffle	13
7	1	339133060	Washer,8,05x17x0,4	11
8	1	339006390	Washer,7,05x19,5x0,2	11
9	1	341100940	Hexagon nut w.recess	12
10	1	316069710	Cover cap without dial	18
11	1	316080350	Shift lever compl.	15
12	1	342001770	Pressure spring	11
14	1	143116230	Ball bearing,8x22x7	12
15	1	343447510	Locking slide	11
17	1	339011970	Gasket	11
20	4	141121640	Fill. head screw(DIN 7985)	11
21	4	141125000	Fillister head screw	11
22	6	141113180	Self-tap. fill. h. screw	11
23	1	338081900	Rating plate	12
24	1	338129960	Indication label, CAS	12
25	1	316054980	Bevel gear w.pinion	25
26	1	316072280	Spindle stop compl.	20
27	1	316072300	Gear housing compl.	32
28	1	316084680	Friction washer set compl.	22
29	1	316081770	Motor housing complete Paddle 18-15	34
31	1	316069840	Spindle lock compl.	17
32	1	316055110	Clamping lever compl.	20
35	1	143195640	O-ring	11
44	1	141153920	Washer 10,2 X 14,8X 0,5	11
50	1	343433280	Flange compl.	20
51	1	341102460	Nut	13
52	1	316055350	Clamping nut compl.,M14	22
53	1	339204780	Wheel guard,D 180	29
55	1	314000970	Anti-vibration handle,M 8	24
56	1	343453150	Filter compl.	19
60	1	339137610	Support plate	11
61	1	141156650	Retaining ring	11
62	1	628967000	Safety bracket DS up to 4kg	
66	1	316066720	Latch compl.	14
67	2	342004180	Pressure spring	11
72	1	339007800	Washer	11

WPBA 18 LTX BL 15-180 Q DS

Position	Amount	Type number	Description	PG
84	1	316065250	Spindle compl.,WBA M14 D180	44
99	1	316084660	Safety clutch with pinion	47
880	1	344130920	Grease 100G	31
889	1	344130560	Grease SF 011 50Gr 1,8oz	33
1001	1	338506710	Verdrahtungsplan 18 V	

metabo
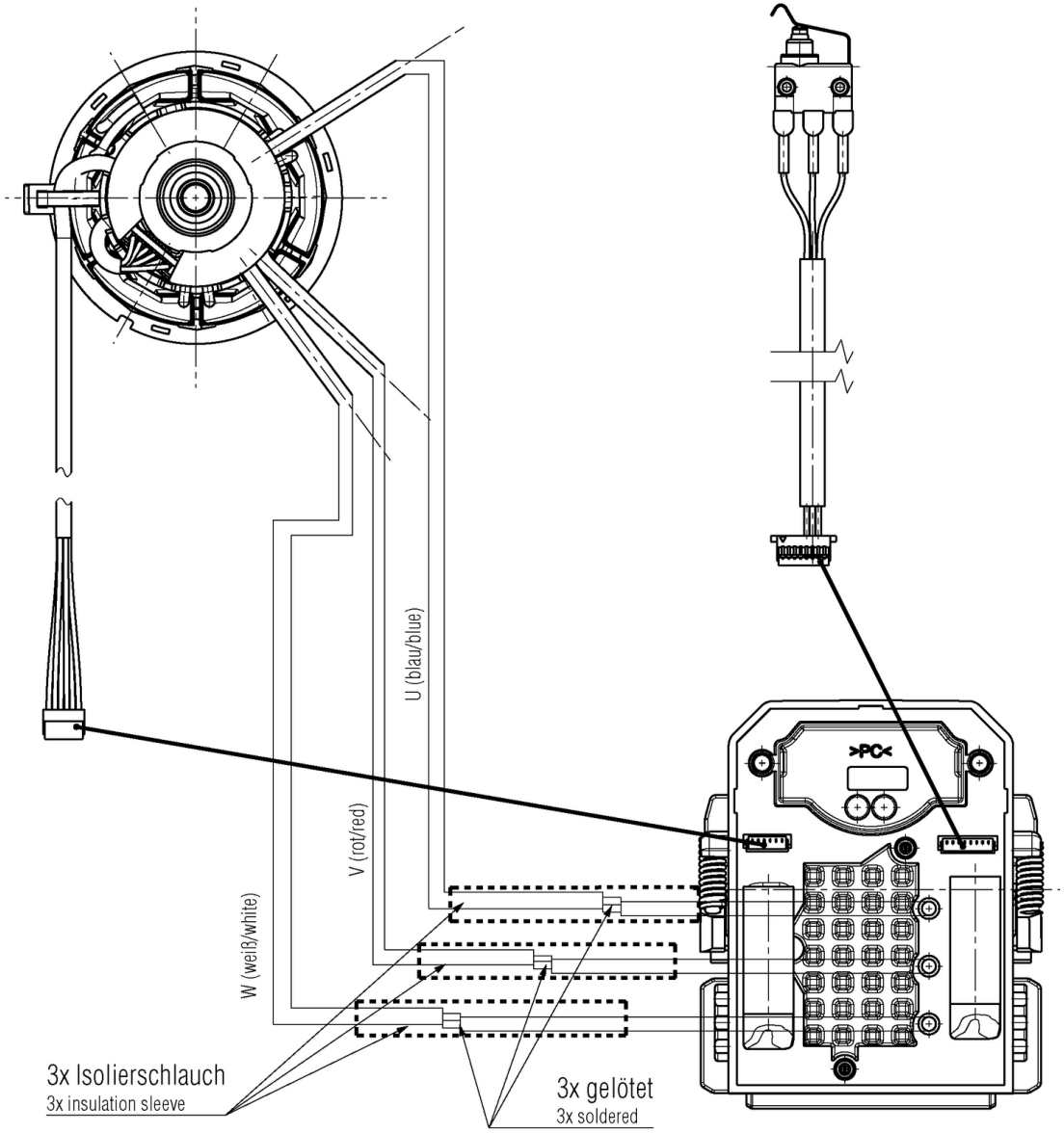
WPBA 18 LTX BL 15-180 Q DS