metabo

ASR 35 M ACP

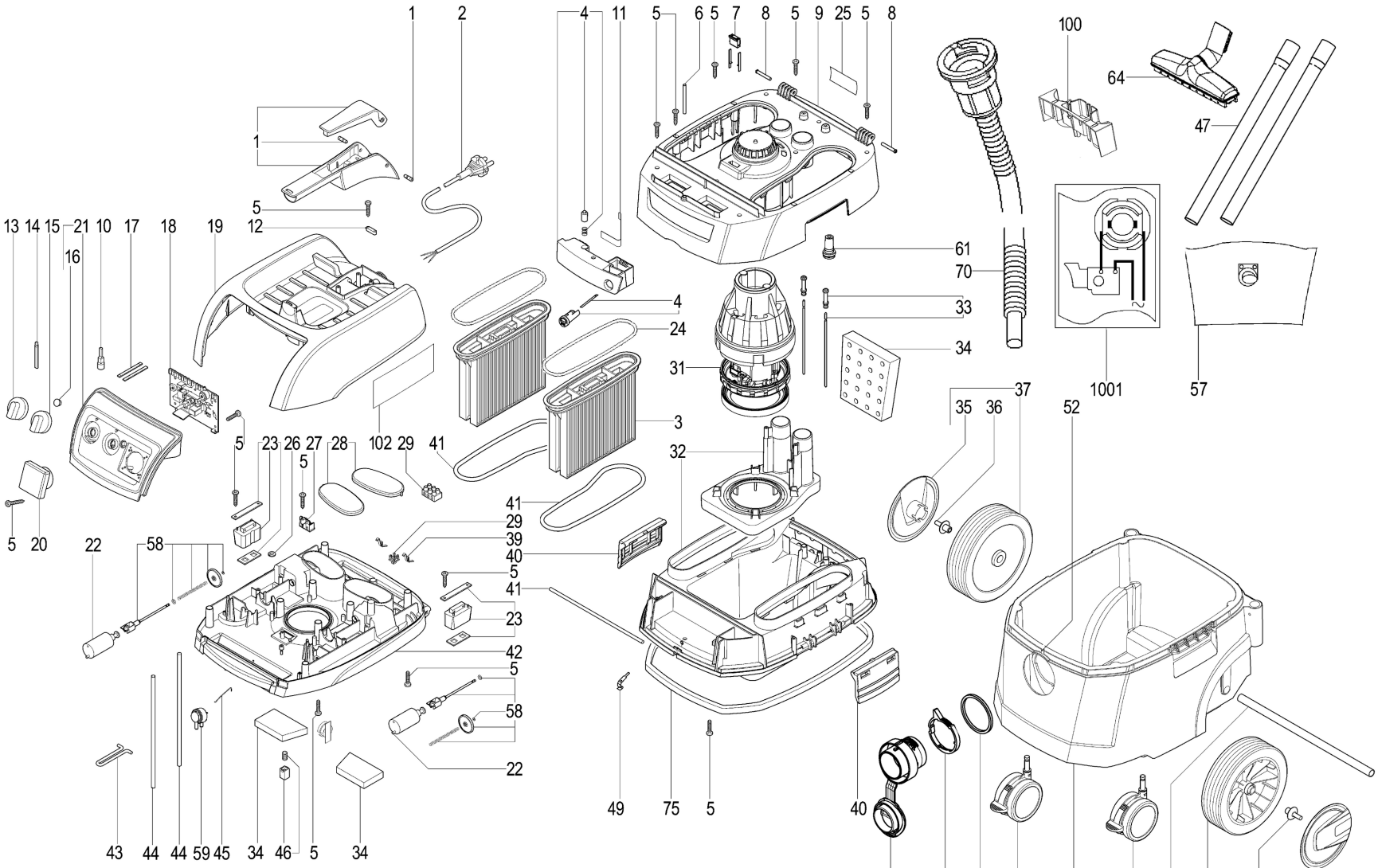

metabo

ASR 35 M ACP

Position	Amount	Type number	Description	PG
1	1	316049040	Handle cpl.	29
2	1	344498830	Cable w. UK plug 110 V	38
3	1	631934000	2 Filter cartidges, Polyester	
4	1	316049030	Latch compl.	30
5	35	141120130	Chipboard screw	22
6	1	341059770	Tubular rivet	15
7	1	316049190	Motor power plug compl.	22
8	2	341515560	Bearing bolt	24
9	1	343430460	Motor housing	44
10	1	341604280	Shift axle	19
11	1	342002960	Flat spring	24
12	1	343378310	Cable clip	11
13	1	343430390	Switch toggle	21
14	1	341604270	Shift axle	15
15	1	343430970	Switch toggle	18
16	1	343072320	Lamp rail	21
17	2	342050950	Switch spring	21
18	1	343084930	Electronic unit	47
19	1	343430410	Cover	40
20	1	344494520	Socket w. screws	31
21	1	343430420	Face plate	35
22	2	316049520	Magnet	49
23	2	316049240	Vibrator compl.	44
24	2	339012360	Pleated filter sealing ring	22
25	1	338064180	Rating plate	11
26	4	343430440	Washer	15
27	1	316049150	Motor power socket	28
28	2	344098990	Cover	15
29	1	343050030	Terminal rail	12
30	1	630796000	Coupling bush internal Ø 40 mm /external	
31	1	317003070	Blower	59
32	1	343430470	Body	47
33	2	316049200	Electrode compl.	26
34	1	344098980	Filter set	27
35	2	343430500	Blank faceplate	18
36	2	343369660	Plug	13
37	1	316049220	Wheel compl.	31
39	2	339135130	contact bow	27
40	2	343430480	Latch	20
41	3	339012490	Pleated filter sealing ring	20
42	1	343430450	Supporting plate	46

metabo

ASR 35 M ACP

Position	Amount	Type number	Description	PG
43	1	339135140	Support	18
44	2	344096320	Vacuum hose	13
45	1	339131340	Contact wire	11
46	4	344099050	Pressure plate compl.	23
47	1	630314000	2 Suction hose 35mm dia.	
49	1	342050960	Contact bridge	15
50	1	343430490	Container compl.	61
51	1	630317000	Adapter	
52	1	339080840	Contact pin	15
53	1	316099070	Suction nozzle	35
54	2	341201080	Caster	24
56	1	341604290	Shaft	24
57	1	630325000	5 PE-filter bags -35/50 l	
58	2	316058850	Feed rod compl.	26
59	1	343084320	pressure sensor	32
61	1	344099730	Gasket	17
62	1	341147670	Horn	41
64	1	343436630	Floor nozzle	33
70	1	631370000	Suction hose Ø-35mm,L-4.0 m,	
71	1	399999990	Part not needed	
75	1	344000520	Foam rubber	26
100	1	343446000	Tube support	24
102	1	144208690	Sticker M	19
1001	1	338505510	Diagram	

OLD

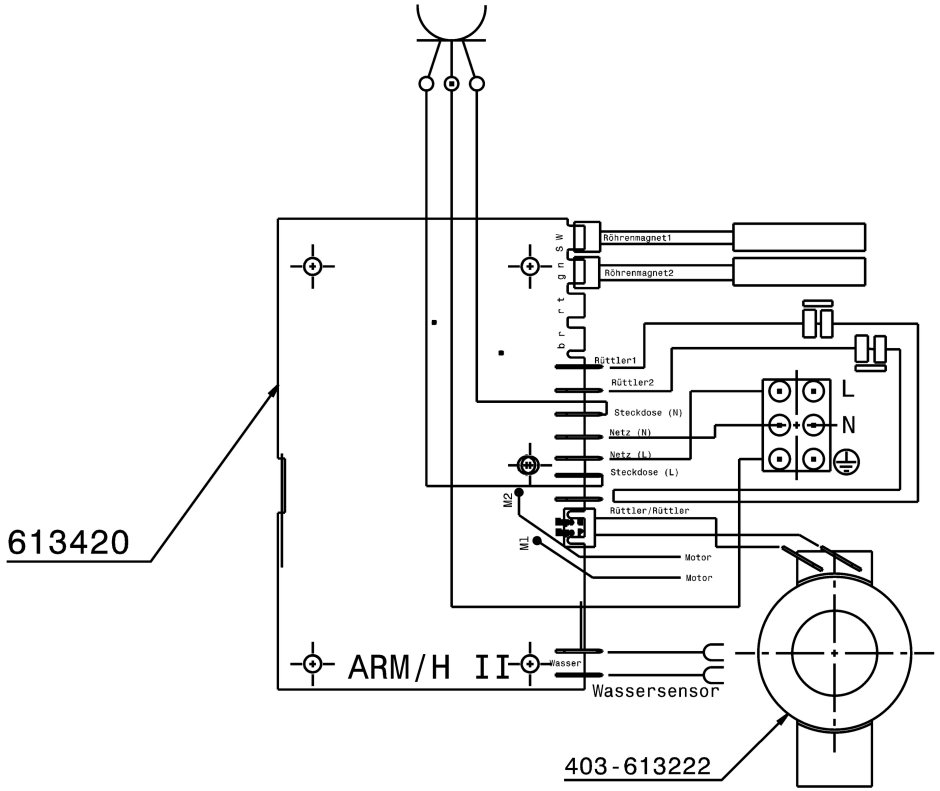
613420
Röhrenmagnet1
Röhrenmagnet2
Rüttler1
Rüttler2
Steckdose (N)
Netz (N)
Netz (L)
Steckdose (L)
Rüttler/Rüttler
Motor
Motor
L
N
M2
M1
ARM/H II
Wasser
Wassersensor
403-613222

NEW

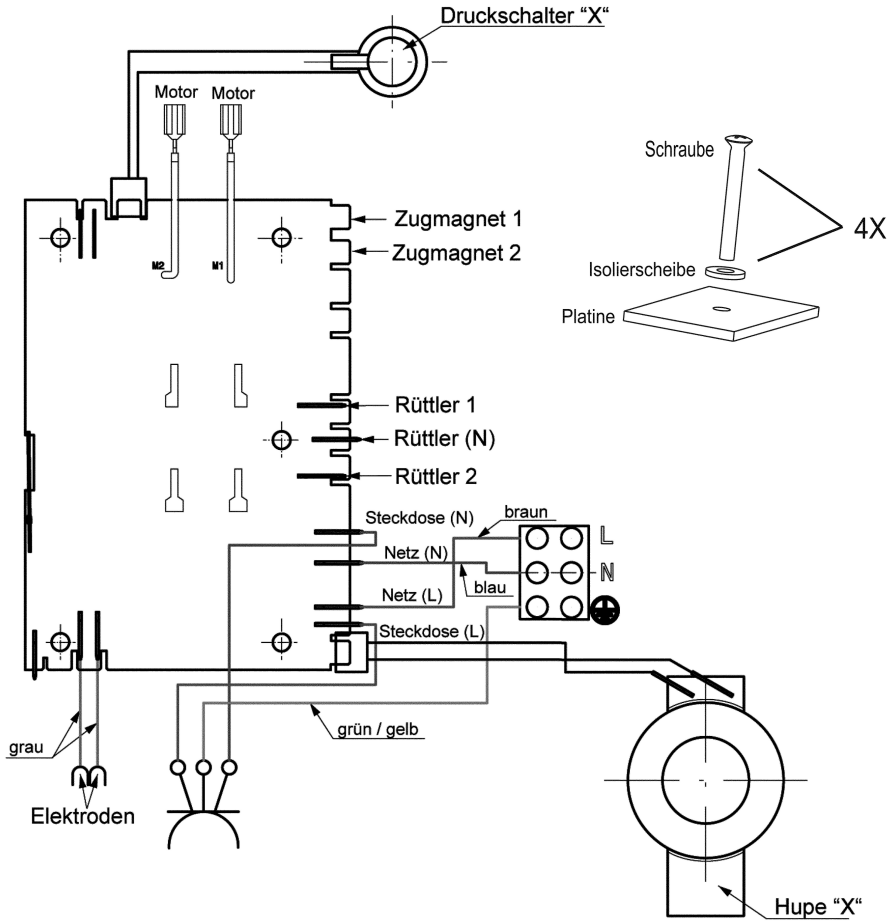
Druckschalter “X“
Motor
Motor
Schraube
4X
Isolierscheibe
Platine
Zugmagnet 1
Zugmagnet 2
M2
M1
Rüttler 1
Rüttler (N)
Rüttler 2
Steckdose (N)
braun
Netz (N)
blau
Netz (L)
Steckdose (L)
L
N
grau
grün / gelb
Elektroden
Hupe “X“