SSW 18 LTX 300 BL

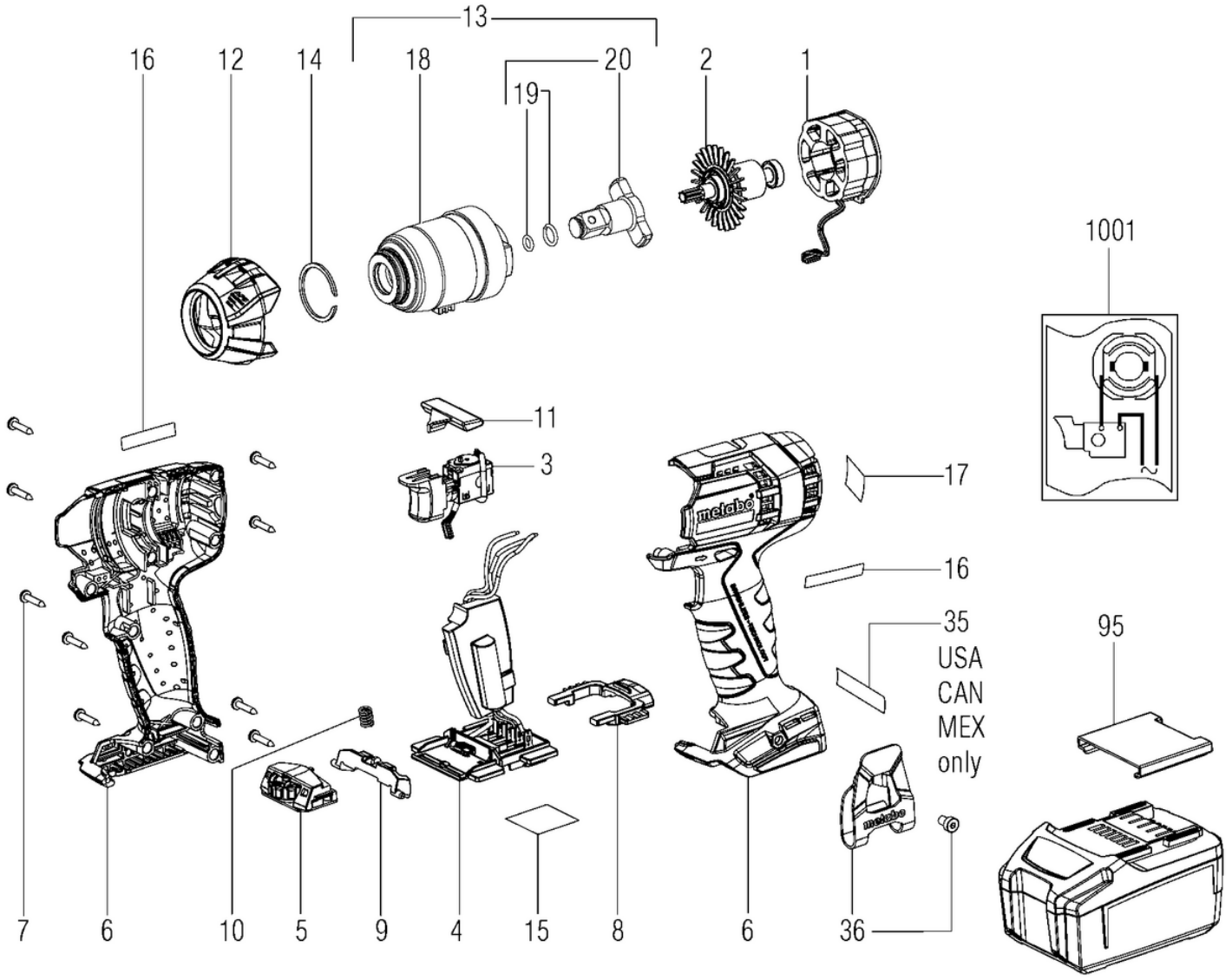

metabo

SSW 18 LTX 300 BL

Position	Amount	Type number	Description	PG
1	1	311012860	Field compl.,18 V	34
2	1	310012540	Armature compl.,18V	37
3	1	316081550	poti-switch DX13	24
4	1	343086570	18Vdc electronic unit for SSW 18 LTX	49
5	1	343086420	thumb wheel compl. 18V SSD LTX BL	27
6	1	343445470	housing w. cover	29
7	9	141113180	Self-tap. fill. h. screw	11
8	1	343438580	Locking slide	12
9	1	343430520	Locking piece	11
10	1	342004070	Pressure spring	11
11	1	343433260	Switch slide,R/L	11
12	1	343445480	cap	15
13	1	316066900	gearbox compl.	47
14	1	141156680	Circlip	11
15	1	338069060	Rating plate	12
16	2	338129070	Rating plate	12
17	1	338129940	Indication label	12
18	1	316067210	Gear housing compl.	29
19	1	316067220	Ring with O-ring	22
20	1	316081610	Spindle compl.	35
35	1	338126950	Indication label,Warning	11
36	1	339137270	Hook	13
95	1	343439680	Cover cap	11
1001	1	338506300	wiring diagram	

metabo

SSW 18 LTX 300 BL

