metabo

DSSW 930-1/2"

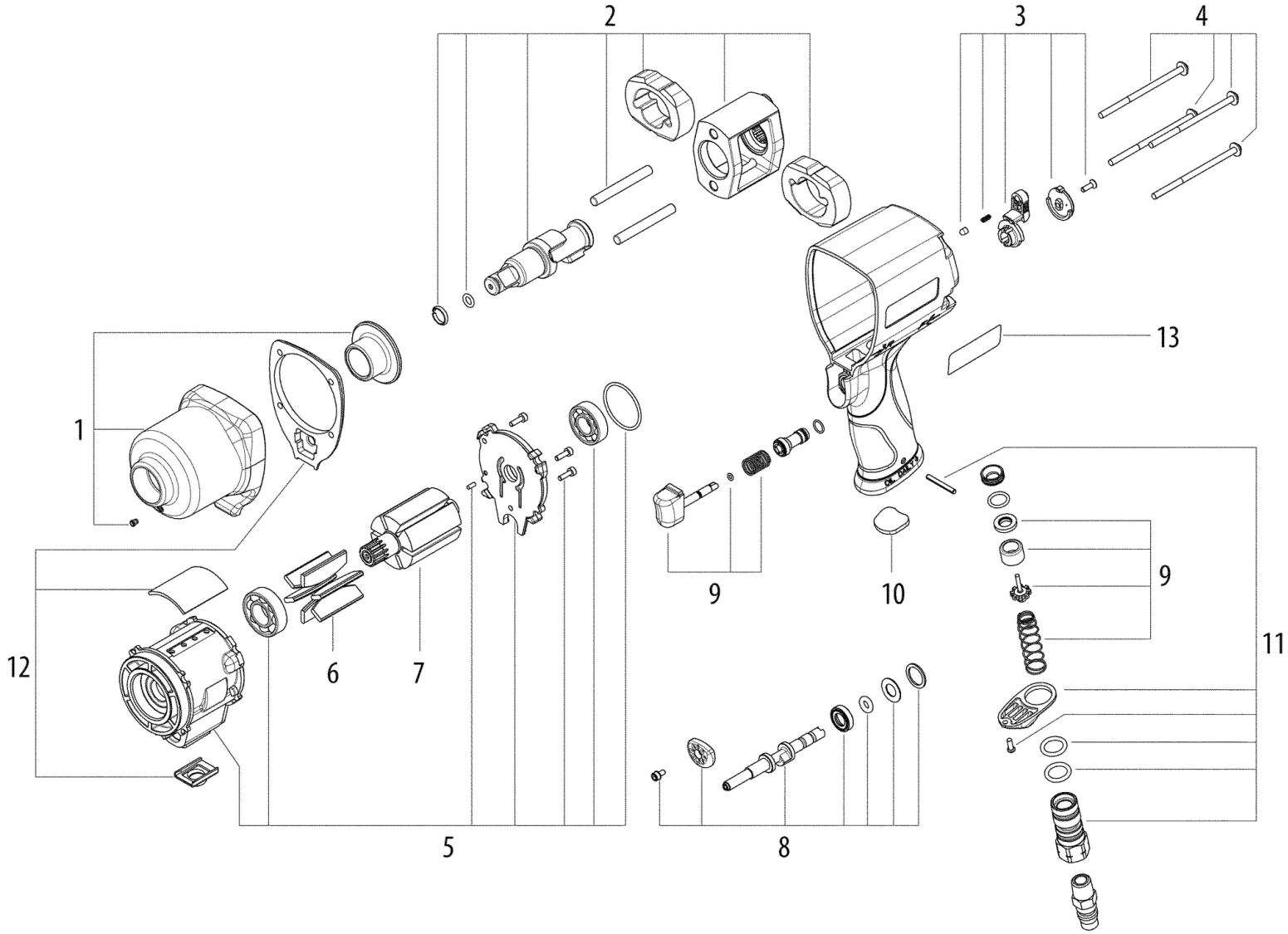

DSSW 930-1/2"

Pozicija	Suma	Įrankio tipo numeris	Aprašymas	PG
1	1	341164770	Housing f. hammer mechanism	31
2	1	316058350	Hammer mechanism compl.	49
3	1	316058370	Speed transmitter	14
4	4	341705230	Screw	18
5	1	316058400	Actuation device compl.	49
6	6	344101430	ROTOR VANE	19
7	1	343437190	ARMATURE	32
8	1	316058430	Change-over switch compl.	29
9	1	316058450	Valve compl.	23
10	1	344101450	Filter	11
11	1	316058470	Air intake compl.	23
12	1	316058500	Sealing set	15
13	1	338062220	Rating plate	11