metabo

HG 18 LTX 500

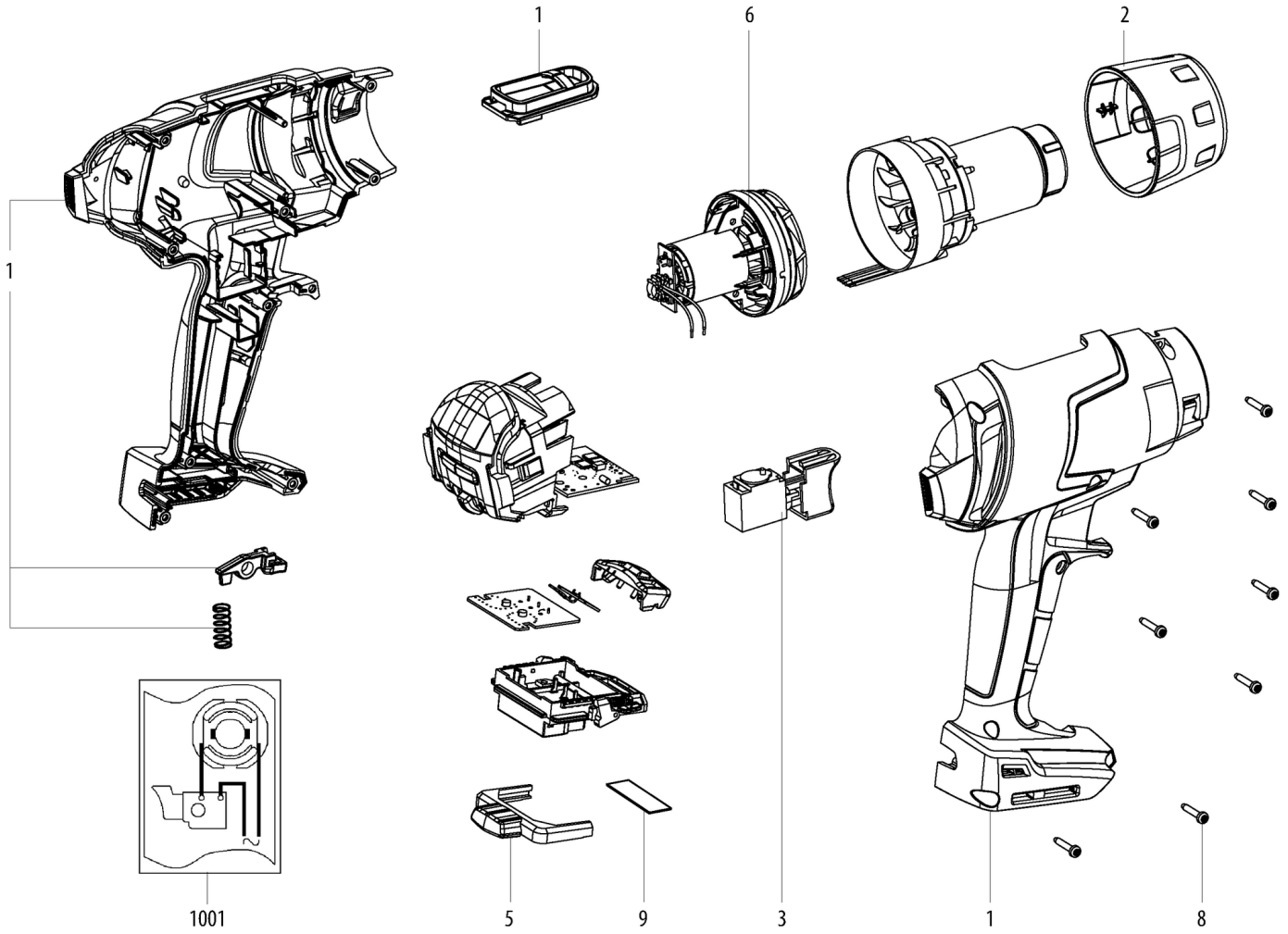

HG 18 LTX 500

Posição	Quantidade	Introduza a referência	Descrição	PG
1	1	343451710	Carcaca cpl.	36
2	1	343451720	Tubo de protecao	15
3	1	343412380	Interruptor	20
5	1	343447510	Cursor de travagem	11
6	1	317005290	Motor	30
8	8	141121960	Parafuso Phillips	11
9	1	338072960	Placa de identificacao	12
66	1	316066720	Alavanca trava Kompl.	14
67	2	342004180	resorte de presion	11
1001	1	338510560	Esquema de ligações	

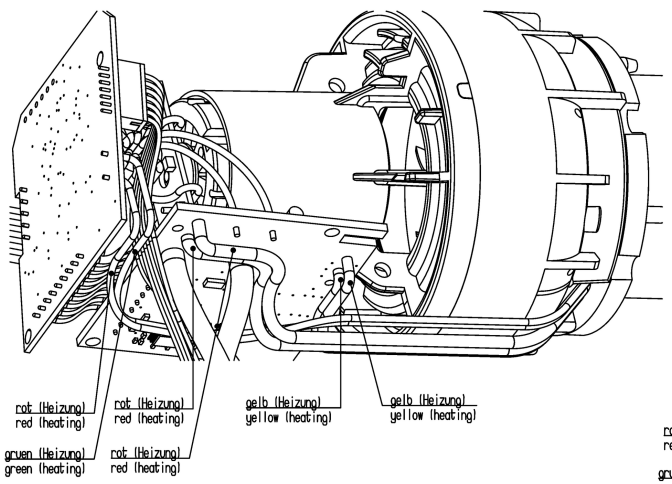
rot (Heizung)
red (heating)
rot (Heizung)
red (heating)
gelb (Heizung)
yellow (heating)
gelb (Heizung)
yellow (heating)
gruen (Heizung)
green (heating)
rot (Heizung)
red (heating)

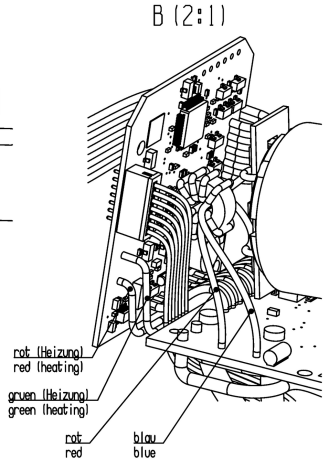
B (2:1)
rot (Heizung)
red (heating)
gruen (Heizung)
green (heating)
rot
red
blau
blue

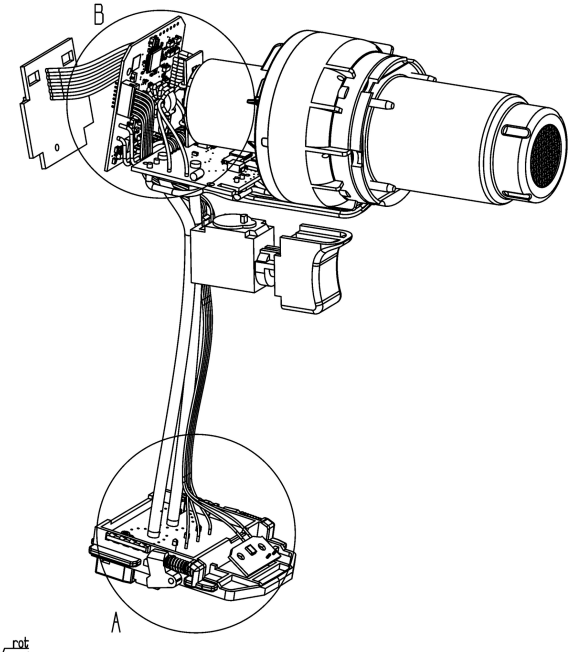
B
A

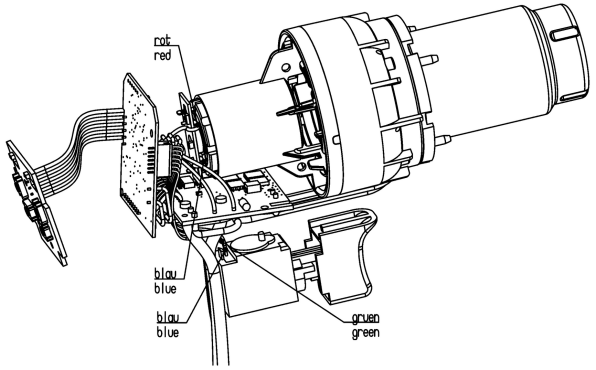
rot
red
blau
blue
blau
blue
gruen
green

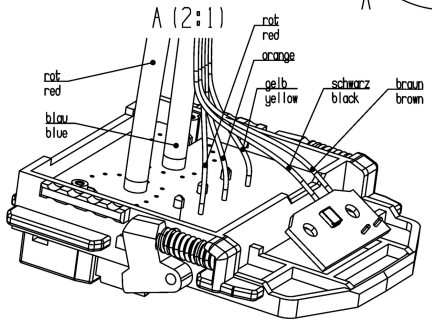
A (2:1)
rot
red
orange
rot
red
gelb
yellow
schwarz
black
braun
brown
blau
blue