metabo

AHS 36 V

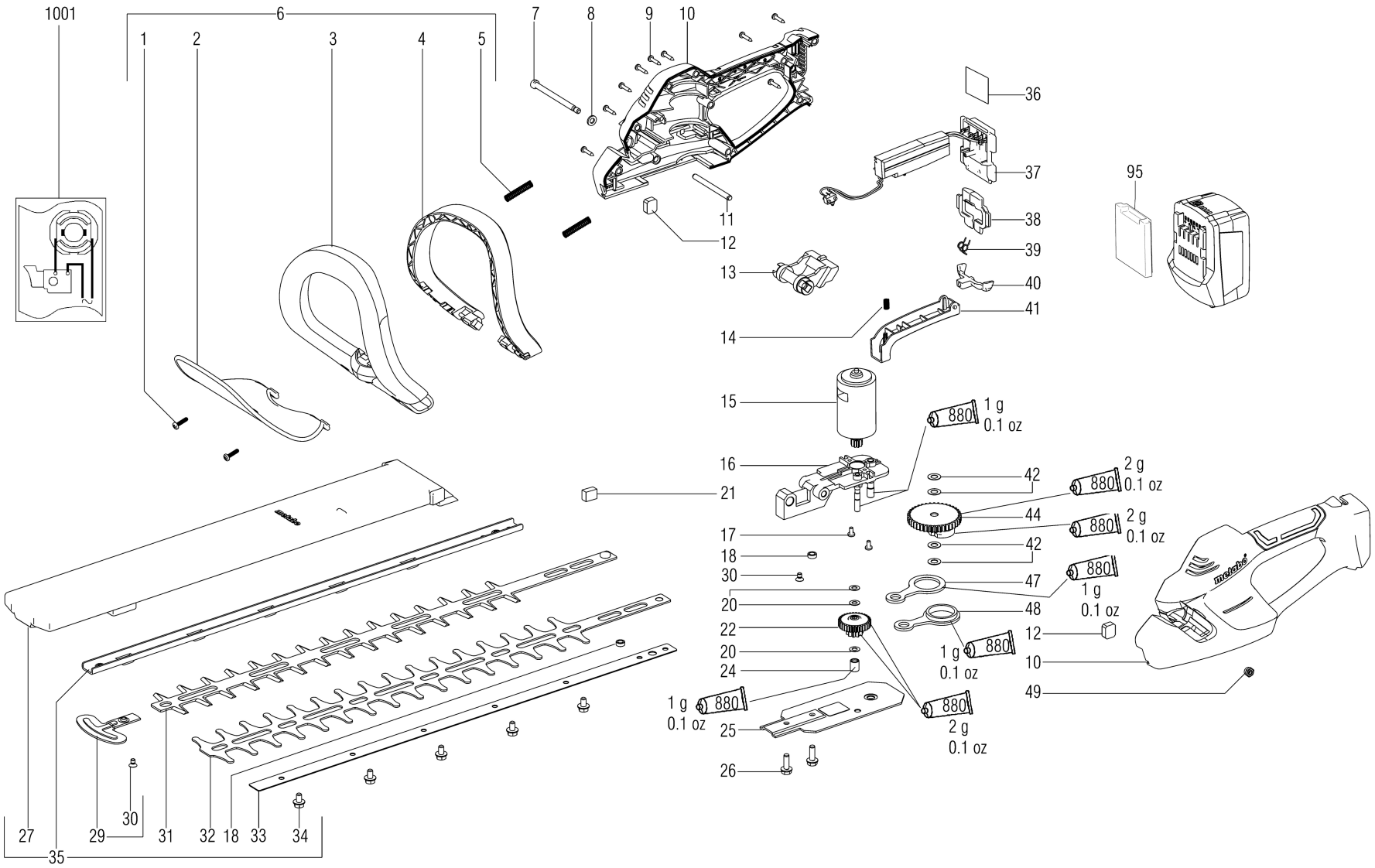

metabo

AHS 36 V

Позиция	Количество	Номер для заказа	Описание	PG
1	2	141118730	Self-tap. fill. h. screw	11
2	1	343399930	Hand guard	17
3	1	343395350	Loop handle	24
4	1	343395360	shift strap	19
5	2	342001180	Pressure spring	11
6	1	316048490	loop handle	30
7	1	341704290	Fitting screw	11
8	1	141151940	Washer	11
9	9	141113180	Self-tap. fill. h. screw	11
10	1	343399640	Housing 2-part,gummed	32
11	1	341055110	Pressure pin	11
12	2	344070660	Felt seal	11
13	1	343399630	Shift fork	11
14	1	342002440	Pressure spring	11
15	1	317004120	Motor,36 V	36
16	1	316048500	Bearing support compl.	33
17	2	141119850	Fillister head screw	11
18	2	341060030	Spacer bush	12
20	3	141152070	Washer	11
21	1	344099060	Foam rubber	11
22	1	316047800	Pinion compl.	26
24	1	341013140	Spacer sleeve	12
25	1	339134890	Cover	23
26	2	141119780	Hexagon head screw	12
27	1	343391510	Storage container	20
29	1	316027170	Hand protector cpl	23
30	2	141121710	Countersunk screw	11
31	1	344162990	OBERMESSER VOLLST.	25
32	1	344163790	Untermesser vollst.	25
33	1	339135020	Pressure strip	19
34	5	141120210	Hexagon head screw	11
35	1	316054640	Knife compl.	41
36	1	338055300	Rating plate	11
37	1	343082300	Electronic unit,36 V	41
38	1	343394790	Switch slide	11
39	1	342022460	Spring clip	11
40	1	343394770	Pressure plate	11
41	1	343399620	Switch trigger	13
42	4	141152400	Washer	11
44	1	316055480	Spur gear compl.	27
47	1	339132380	Con rod	18

Позиция	Количество	Номер для заказа	Описание	PG
48	1	339132370	Con rod	18
49	1	141130650	Hexagonal lock nut	12
880	0,008	136011850	Grease	38
1001	1	338505410	Wiring diagram	

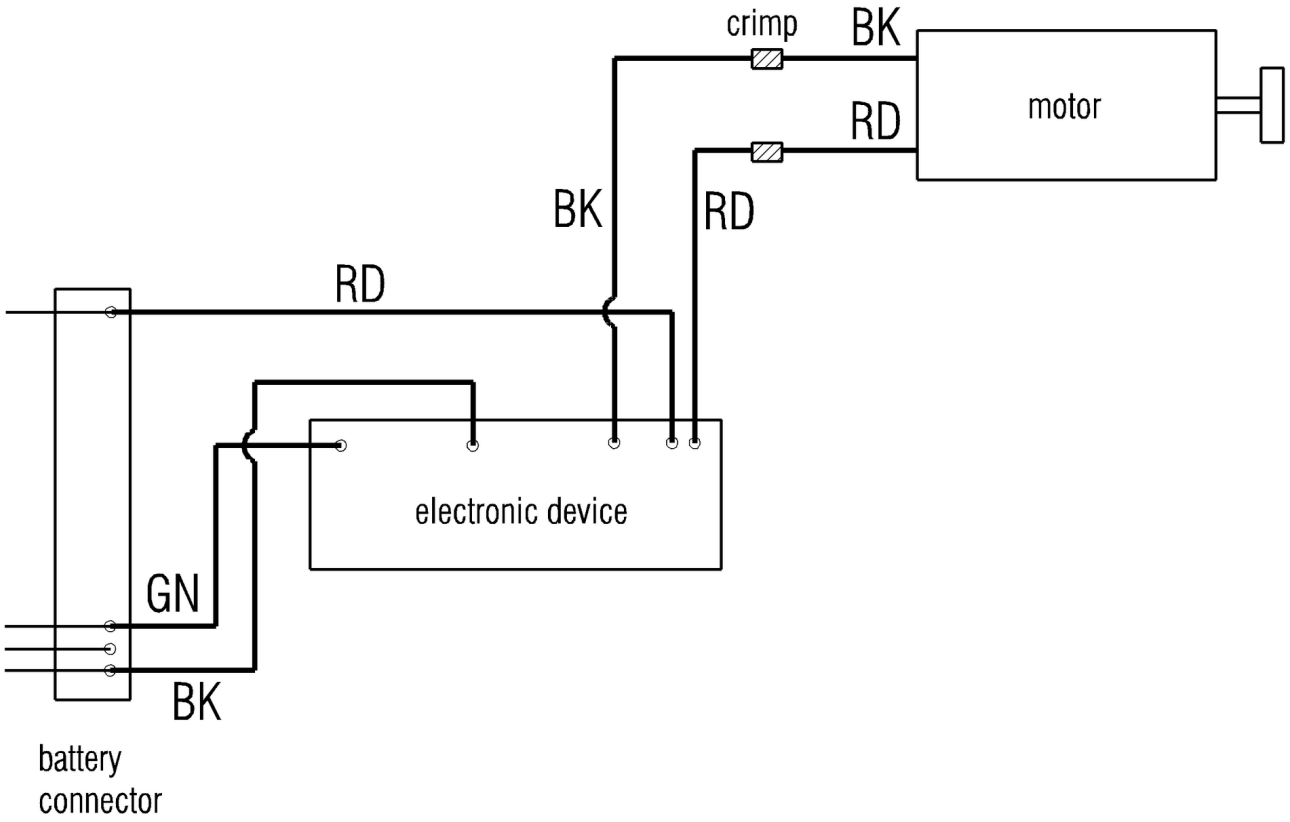
crimp
BK
motor
RD
BK
RD
RD
electronic device
GN
BK
battery
connector