metabo

BS 18 L

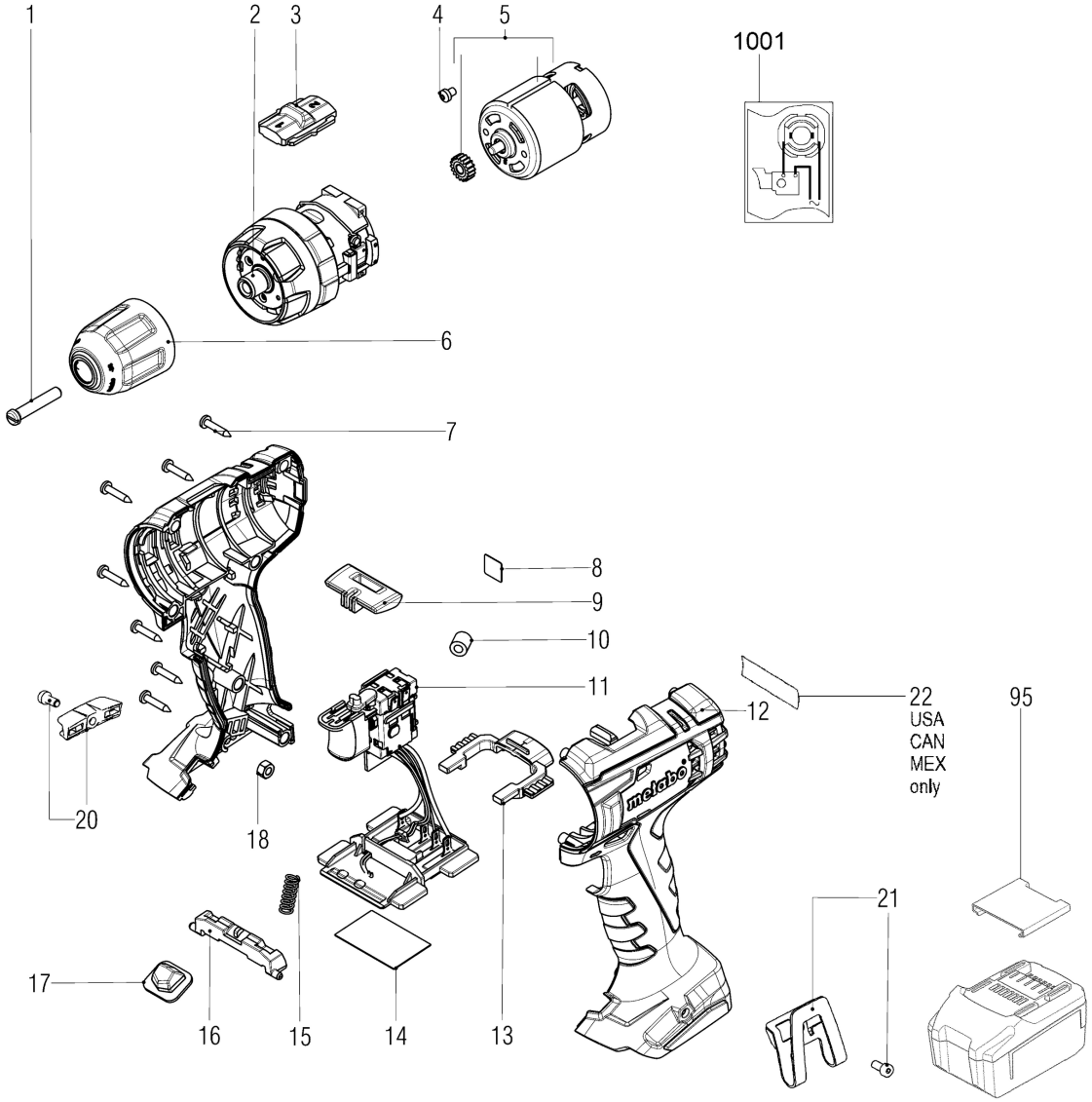

metabo

BS 18 L

Позиция	Количество	Номер для заказа	Описание	PG
1	1	341705050	Cap screw	11
2	1	316096120	Gear-box cpl.	32
3	1	343444860	Switch slide,H/L	11
4	1	341705450	Fillister head screw	11
5	1	316066650	Motor compl.	30
7	7	141113180	Self-tap. fill. h. screw	11
8	1	338129940	Indication label	12
9	1	343410580	Switch,R+L	11
10	1	143160140	Toroidal Ferrite	12
11	1	343411560	Electronic switch 18 V	33
12	1	343444850	Motor housing	26
13	1	343438580	Locking slide	12
14	1	338069190	Rating plate 02321000 BS 18 L	12
15	1	342003030	Pressure spring	11
16	1	343430520	Locking piece	11
17	1	343083380	LED lense	13
18	2	141130090	Hexagonal nut	11
20	1	343448690	bit-depot 18 V	13
21	1	339137270	Hook	13
95	1	343439680	Cover cap	11
850	1	636609000	Быстрозажимной патрон Futuro Plus H1	