BH 18 LTX BL 16

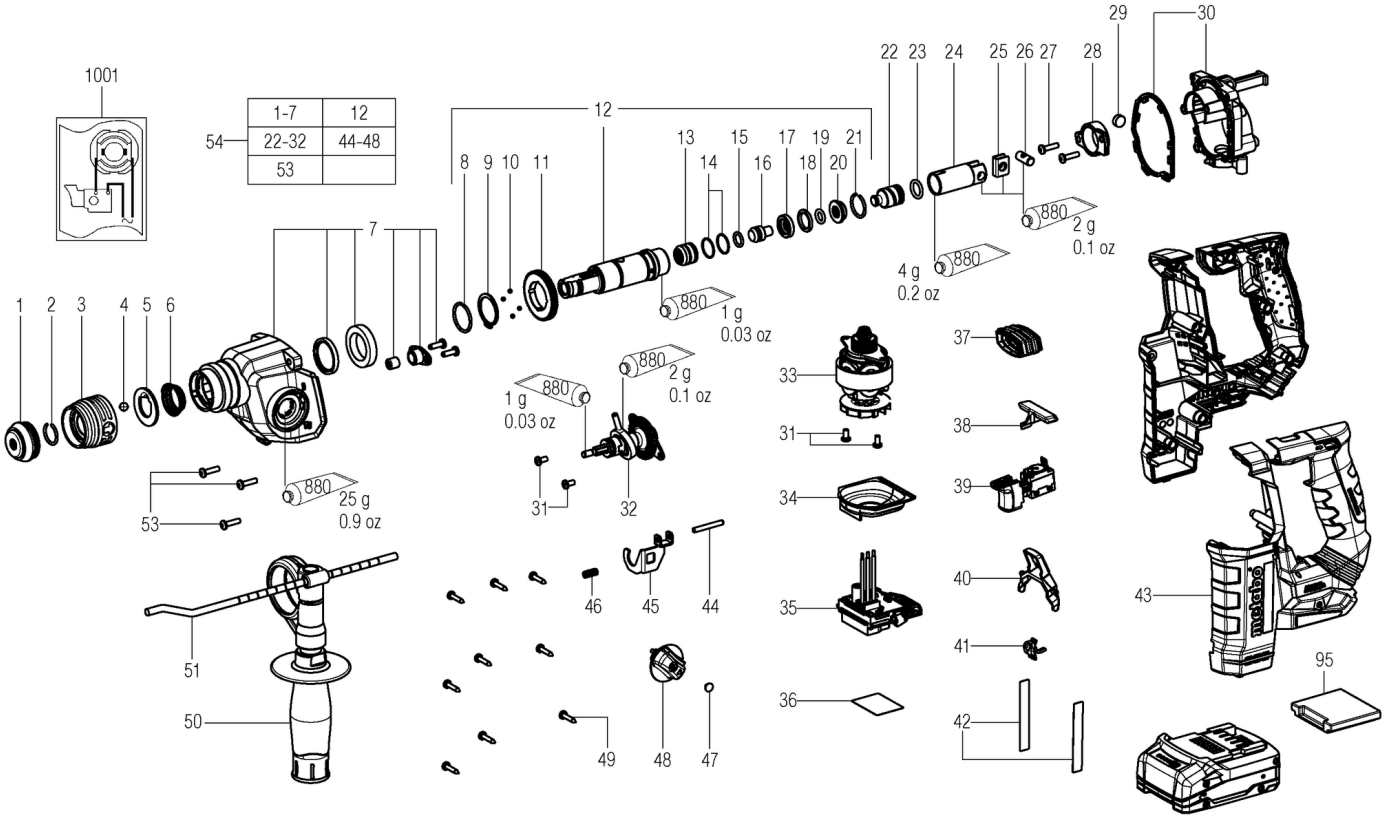

metabo

BH 18 LTX BL 16

Місце	Кількість	Номер артикулу	Опис	PG
1	1	344099390	Rubber cap	11
2	1	342022340	Circlip	11
3	1	343432920	Adjusting ring	16
4	1	143115330	Ball	11
5	1	339007650	Washer	11
6	1	342003890	Pressure spring	11
7	1	316070060	gear housing compl.	29
8	1	6403636060	RETAINING RING A 25	11
9	1	141180150	Retaining ring	11
10	4	143120020	Ball	12
11	1	340023120	spur gear	23
12	1	316070090	drill driving sleeve compl.	34
13	1	341006710	Bushing	18
14	2	143196030	O-ring	11
15	1	143196010	O-ring	11
16	1	341212800	piston	15
17	1	341212810	Damping ring	14
18	1	143196020	O-ring	11
19	1	143194630	O-ring	13
20	1	341020250	Catching sleeve	14
21	1	141181780	Circlip	11
22	1	341212840	Striker	17
23	1	143194790	O-ring	11
24	1	341212820	exciter sleeve	19
25	1	339013150	Washer	12
26	1	341519720	GUIDE PIN	14
27	2	141119440	Fill. head screw(DIN 7985)	11
28	1	341072070	Bearing ring	11
29	1	344070670	Felt seal	11
30	1	316070070	gear flange compl.	24
31	2	141119570	Fill. head screw(DIN 7985)	11
32	1	316070080	intermediate shaft compl.	32
33	1	316070630	motor compl. 18V	40
34	1	339151360	baffle	11
35	1	343088160	electronic unit, BHA18BL	42
36	1	338074300	rating plate 00324000 BH 18 LTX BL 16	12
37	1	344102660	bellows	14
38	1	343411970	Switch slide R_L	11
39	1	343412420	Poti switch	23
40	1	343450870	Release bracket	11
41	1	316069130	LED assembly	17

Місце	Кількість	Номер артикулу	Опис	PG
42	2	338132540	type label BH 18 LTX BL 16 600324	12
43	1	343451820	Housing w.cover	26
44	1	141162780	Cylindrical pin	11
45	1	339149150	Shift fork	11
46	1	342004280	pressure spring	11
47	1	343398340	Seal	11
48	1	316069100	control knob compl.	14
49	9	141113180	Self-tap. fill. h. screw	11
50	1	314000630	Supporting handle cpl.	25
51	1	341511630	Depth stop	16
53	3	141120070	Fill. head screw	11
54	1	316080650	Gear-box cpl.	50
95	1	343439680	Cover cap	11
880	1	344130800	Grease FG 126	26
1001	1	338510320	Diagram	

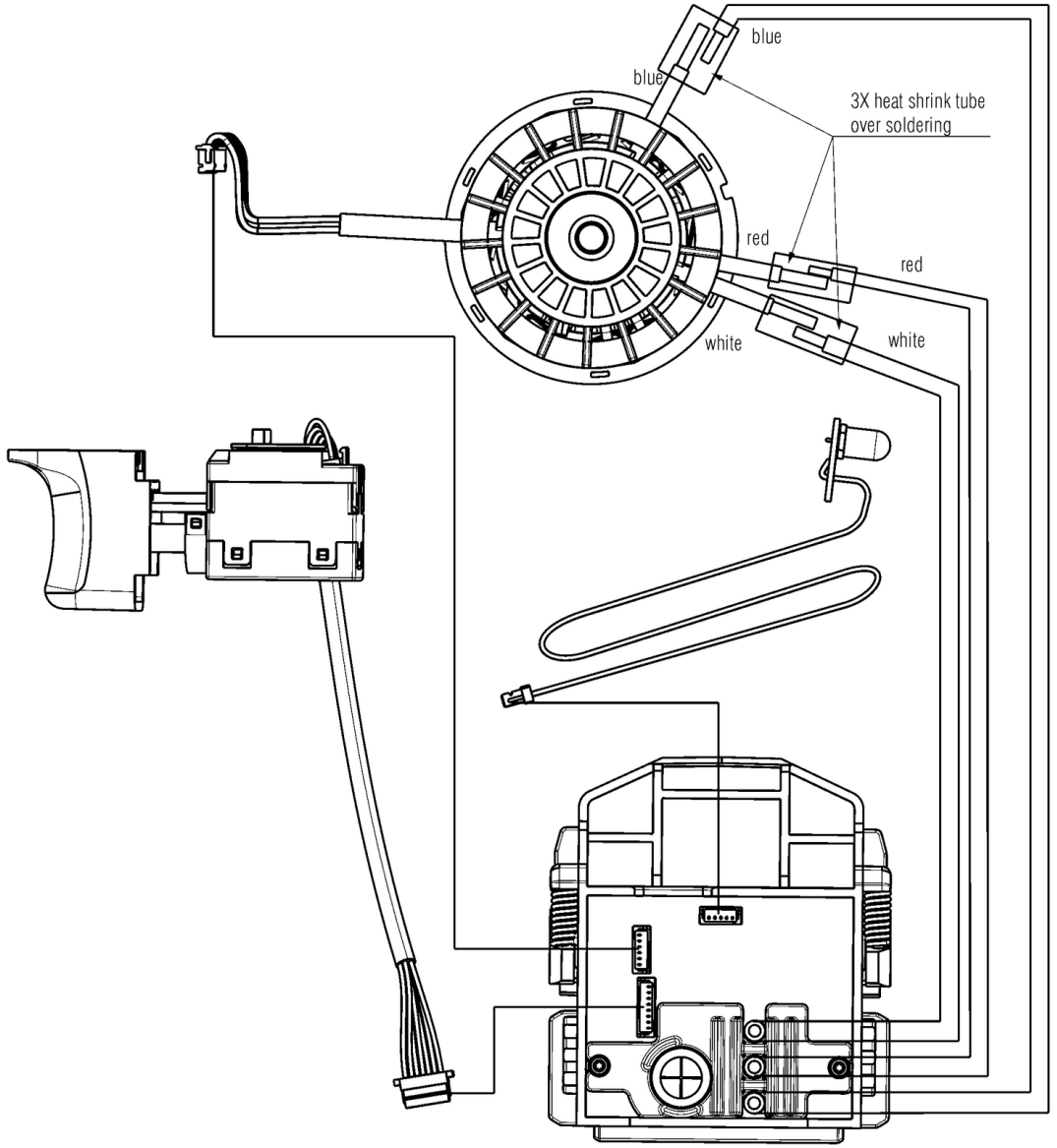
blue
blue
3X heat shrink tube
over soldering
red
red
white
white